# 1. General Description

## A: COMPONENT

### 1. FIXED GLASS (SEDAN MODEL)

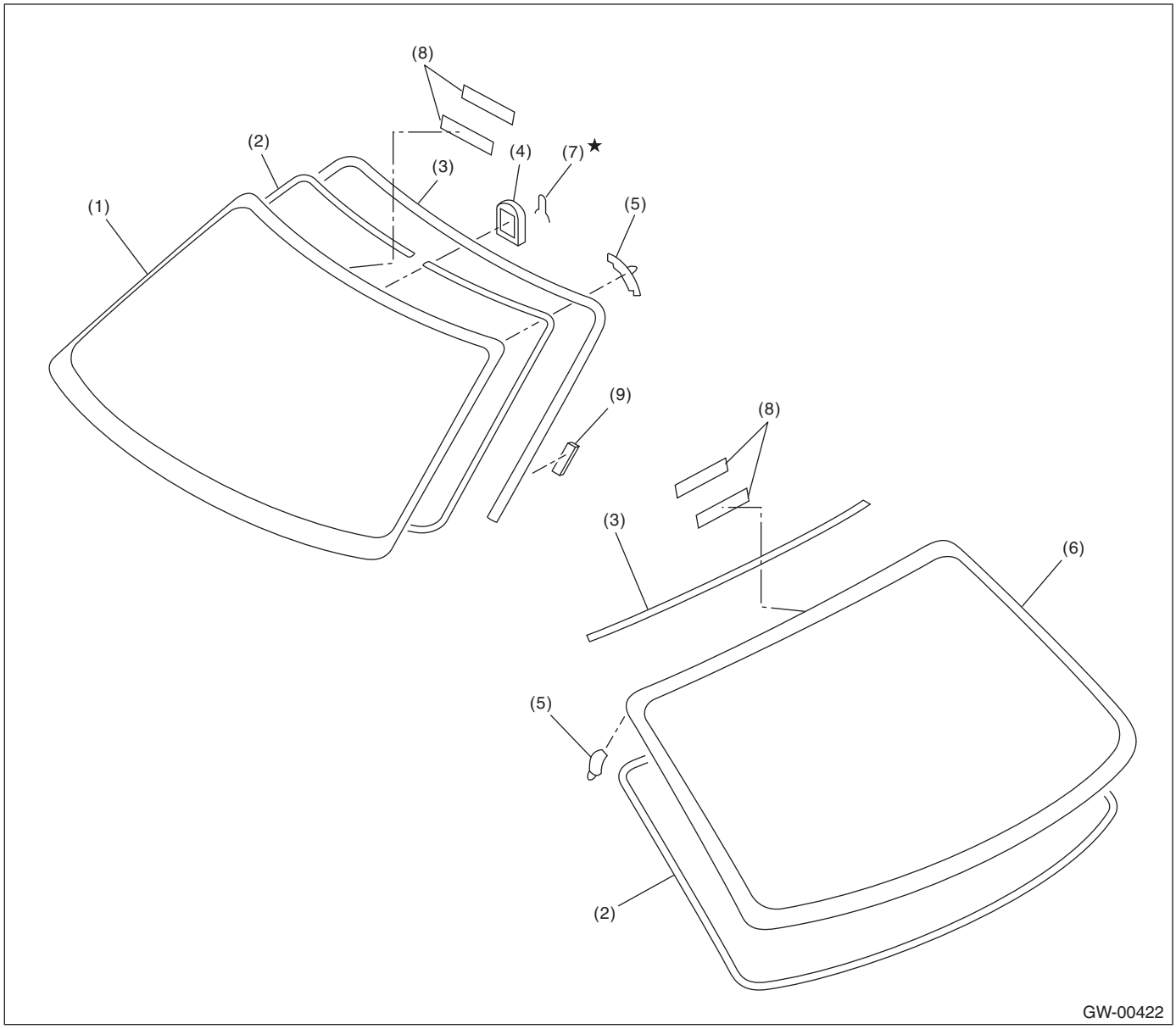


| | | | | | |
|---|---|---|---|---|---|
| (1) | Windshield glass | (4) | Rearview mirror mount | (7) | Spring |
| (2) | Dam rubber | (5) | Locating pin | (8) | Fastener |
| (3) | Molding | (6) | Rear window glass | (9) | Seal |

## 2. FIXED GLASS (WAGON MODEL)

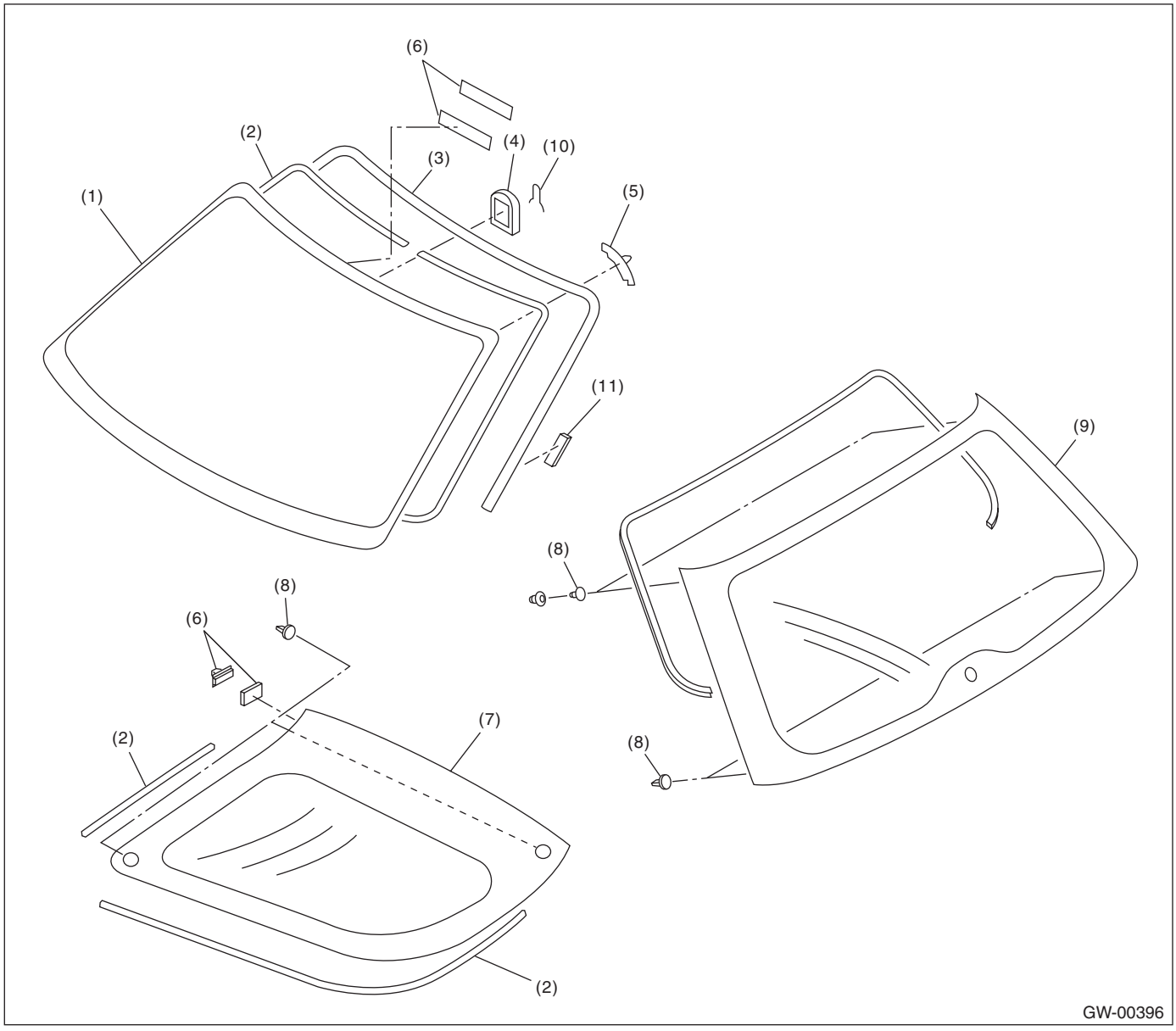


| | | | | | |
|---|---|---|---|---|---|
| (1) | Windshield glass | (5) | Locating pin | (9) | Rear gate glass |
| (2) | Dam rubber | (6) | Fastener | (10) | Spring |
| (3) | Molding | (7) | Rear quarter glass | (11) | Seal |
| (4) | Rearview mirror mount | (8) | Locating pin | | |

## 3. FRONT DOOR GLASS

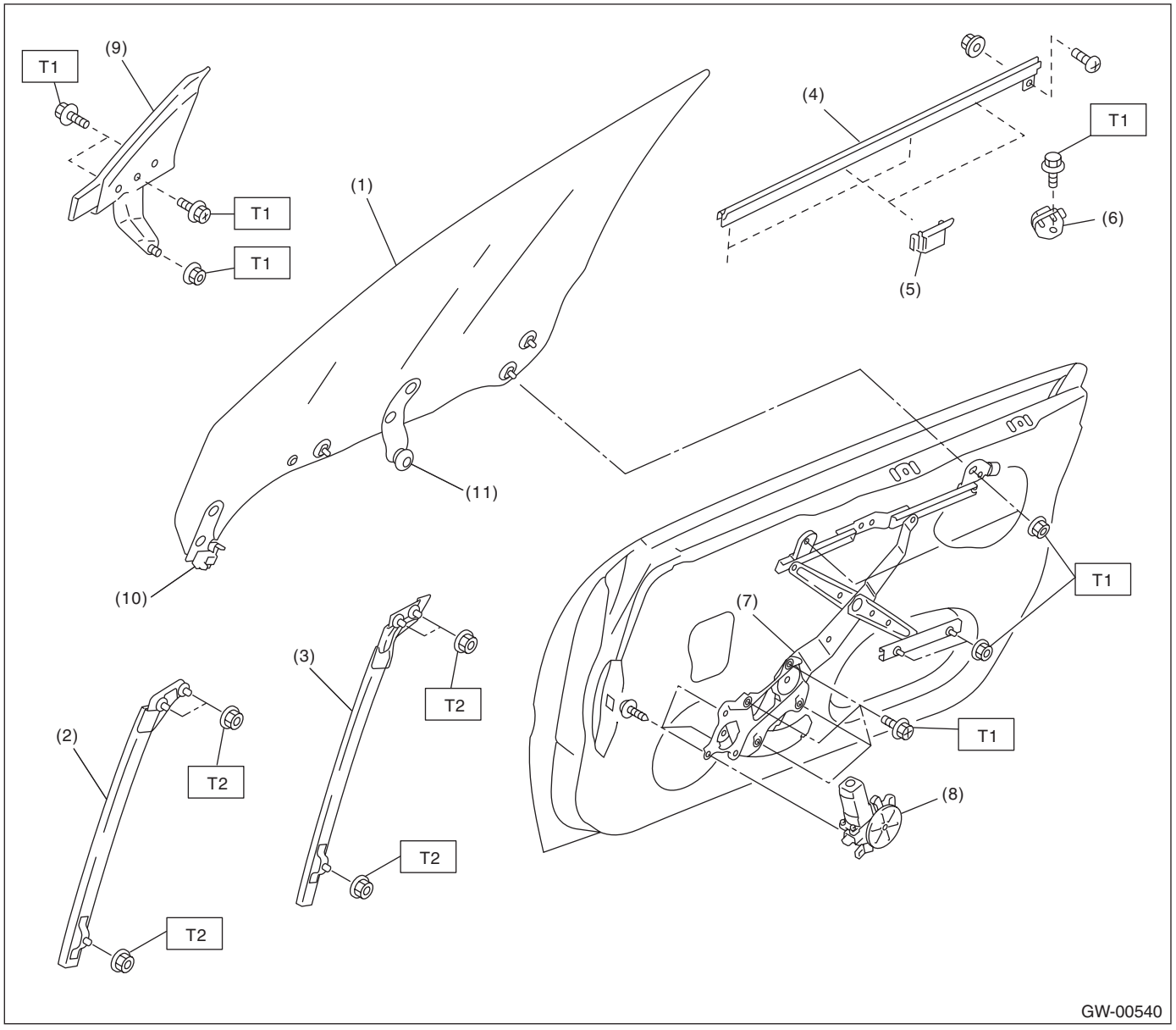


| | | | | | |
|---|---|---|---|---|---|
| (1) | Glass | (6) | Stabilizer (inner) | (11) | Roller |
| (2) | Door sash (Front) | (7) | Regulator ASSY | | |
| (3) | Door sash (Rear) | (8) | Motor ASSY | | |
| (4) | Weather strip | (9) | Mirror gusset | | |
| (5) | Stabilizer (outer) | (10) | Slider | | |

***Tightening torque:N·m (kgf-m, ft-lb)***
***T1: 7.4 (0.75, 5.5)***
***T2: 13.7 (1.4, 10.1)***

## 4. REAR DOOR GLASS

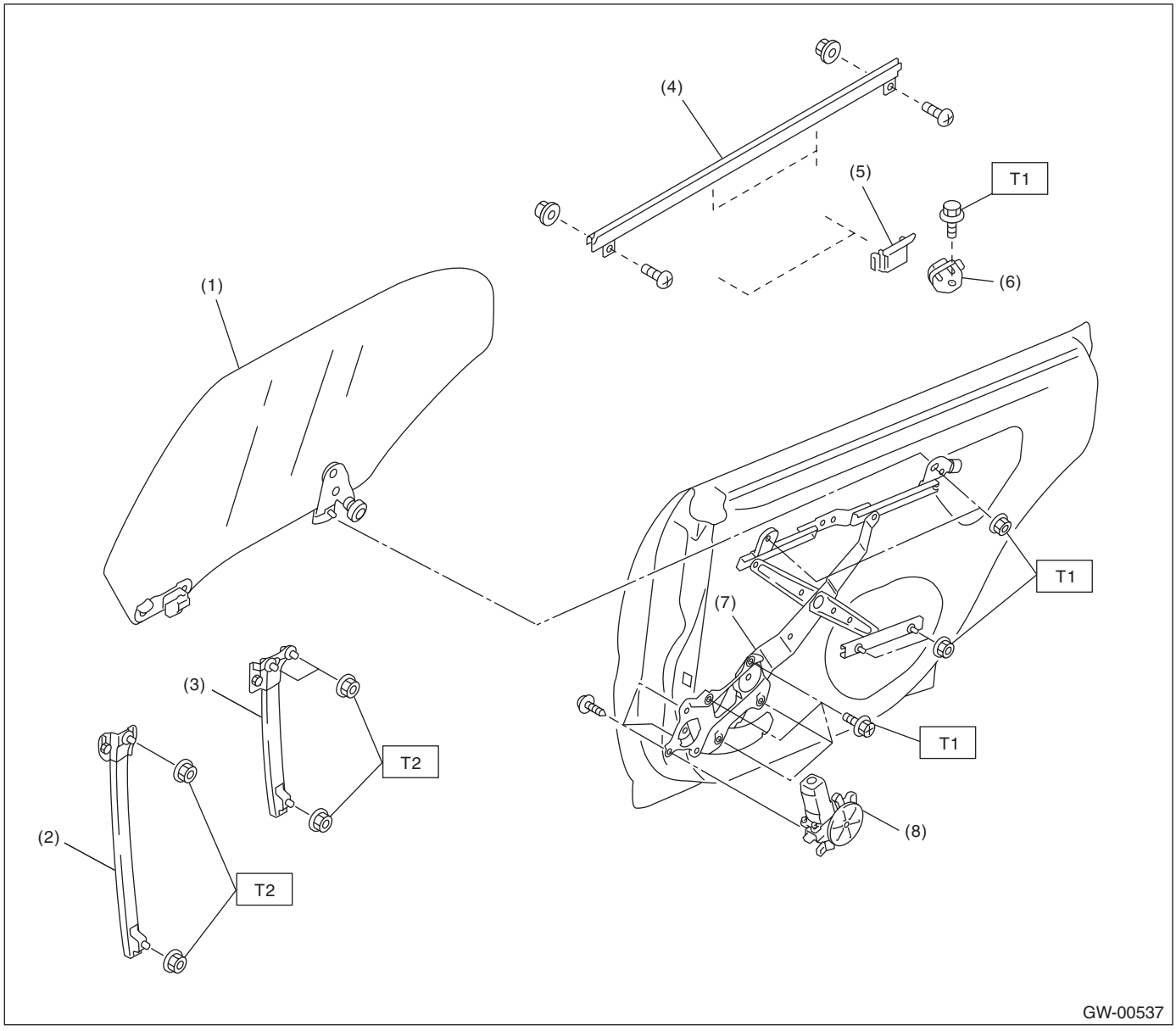


| | | | |
|---|---|---|---|
| (1) | Glass | (5) | Stabilizer (outer) |
| (2) | Door sash (Front) | (6) | Stabilizer (inner) |
| (3) | Door sash (Rear) | (7) | Regulator ASSY |
| (4) | Weather strip | (8) | Motor ASSY |

***Tightening torque:N·m (kgf-m, ft-lb)***
***T1: 7.4 (0.75, 5.5)***
***T2: 13.7 (1.4, 10.1)***

### 5. MIRROR

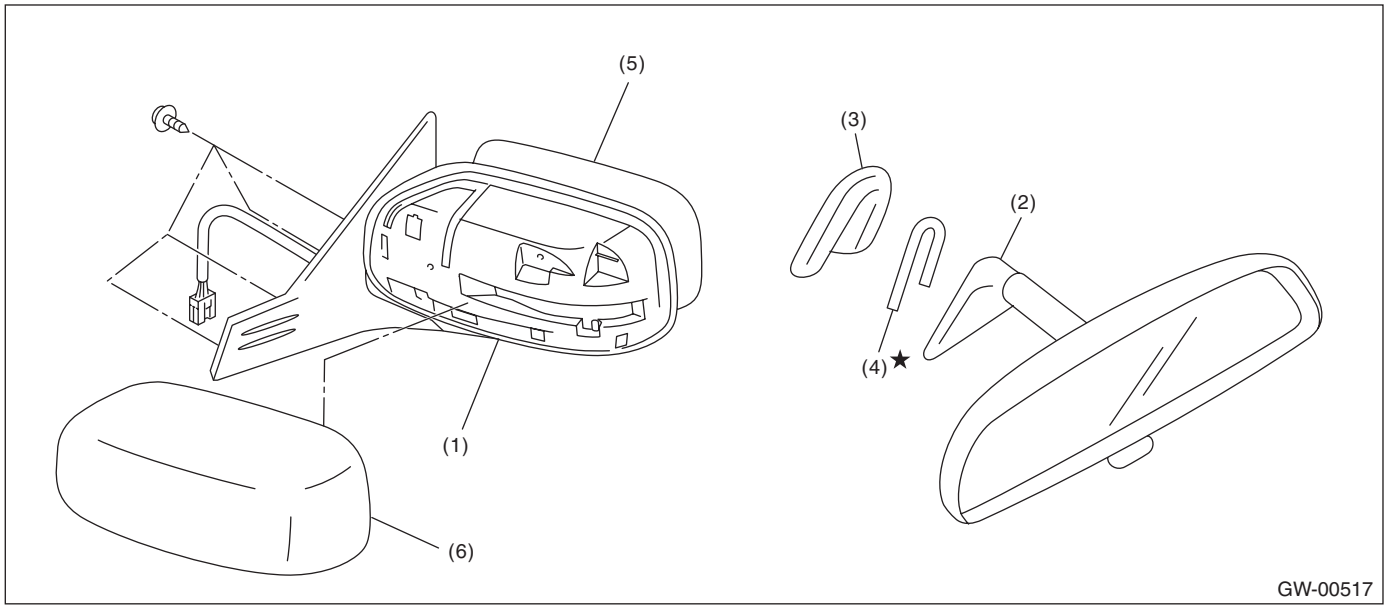


| | | | | | |
|---|---|---|---|---|---|
| (1) | Outer mirror | (3) | Mount | (5) | Mirror |
| (2) | Rearview mirror | (4) | Spring | (6) | Scalp cap |

## B: CAUTION

- When electrical connectors are disconnected, always conduct an operational check after connecting them again.
- Avoid impact and damage to the glass.

## C: PREPARATION TOOL

### 1. SPECIAL TOOL

| ILLUSTRATION | TOOL NUMBER | DESCRIPTION | REMARKS |
|---|---|---|---|
| 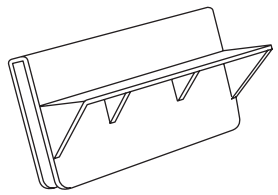 ST61299AE000 | 61299AE000 | SPACER | Used for adjusting the upper end position of the front door glass. (Glass thickness: 5 mm (0.197 in)) |
| 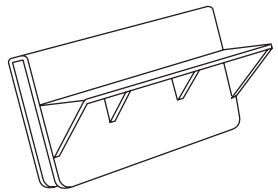 ST61299AE010 | 61299AE010 | SPACER | Used for adjusting the upper end position of rear door glass. (Glass thickness: 4 mm (0.157 in)) |

## 2. GENERAL TOOL

| TOOL NAME | REMARKS |
|---|---|
| Circuit tester | Used for checking voltage and continuity. |
| Piano wire | Used for removing the window glass. |
| Windshield glass knife | Used for removing the window glass. |